DTC	**C0210/33**	**Rear Speed Sensor RH Circuit**

DTC	**C0215/34**	**Rear Speed Sensor LH Circuit**

DTC	**C1238/38**	**Foreign Object is Attached on Tip of Rear Speed Sensor RH**

DTC	**C1239/39**	**Foreign Object is Attached on Tip of Rear Speed Sensor LH**

DTC	**C1273/73**	**Low Output Signal of Rear Speed Sensor RH (Test Mode DTC)**

DTC	**C1274/74**	**Low Output Signal of Rear Speed Sensor LH (Test Mode DTC)**

DTC	**C1277/77**	**Abnormal Change in Output Signal of Rear Speed Sensor RH (Test Mode DTC)**

DTC	**C1278/78**	**Abnormal Change in Output Signal of Rear Speed Sensor LH (Test Mode DTC)**

DESCRIPTION

Refer to DTC C0200/31, C0205/32, C1235/35, and C1236/36 (See page BC-21).
DTCs C1273/73, C1274/74, C1277/77 and C1278/78 are output only in the test mode (SIGNAL CHECK).

DTC No.	DTC Detecting Condition	Trouble Area
C0210/33 C0215/34	Any of the following conditions is detected: – At a vehicle speed of 6 mph (10 km/h) or more, pulses are not input for 30 sec. – A lapse in pulse signal transmission from the speed sensor occurs frequently when the vehicle is running (ABS is in operation). – Noise can be detected in pulse signals transmitted from the speed sensor 75 times or more within 5 seconds. – An open in the speed sensor system is detected when the vehicle is stopped (less than 1 second).	• Right rear and left rear speed sensor • Each speed sensor circuit • Speed sensor rotor • Sensor installation
C1238/38 C1239/39	At a vehicle speed of 12 mph (20 km/h) or more, the condition that noise is included in the speed sensor signal continues for 5 sec. or more.	• Right rear and left rear speed sensor • Speed sensor rotor

HINT:
DTC No. C0210/33 and C1238/38 are for the right rear speed sensor.
DTC No. C0215/34 and C1239/39 are for the left rear speed sensor.

cardiagn.com

WIRING DIAGRAM

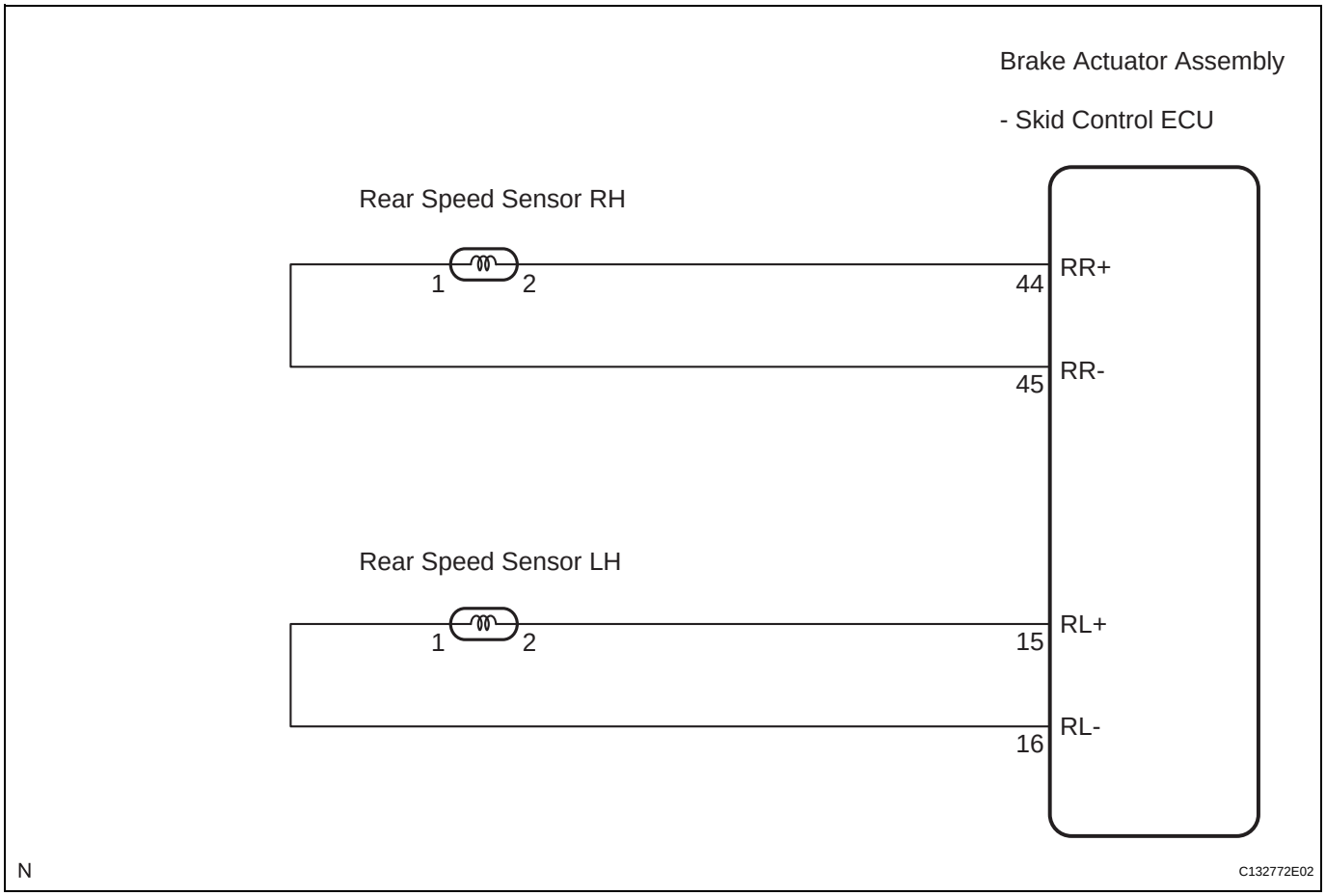

INSPECTION PROCEDURE

1	READ VALUE OF INTELLIGENT TESTER (REAR SPEED SENSOR)

(a) Connect the intelligent tester to the DLC3.
(b) Start the engine.
(c) Select the DATA LIST mode on the intelligent tester.

Item	Measurement Item / Range (Display)	Normal Condition
WHEEL SPD RL	Wheel speed sensor (RL) reading / min.: 0 km/h (0 MPH), max.: 326 km/h (202 MPH)	Actual wheel speed
WHEEL SPD RR	Wheel speed sensor (RR) reading / min.: 0 km/h (0 MPH), max.: 326 km/h (202 MPH)	Actual wheel speed

(d) Check that there is no difference between the speed value output from the speed sensor displayed on the intelligent tester and the speed value displayed on the speedometer when driving the vehicle.
OK:
There is almost no difference in the displayed speed value.
HINT:
There is tolerance of +-10% in the speedometer indication.

cardiagn.com

NG → Go to step 3

OK

2 INSPECT SPEED SENSOR AND SENSOR ROTOR SERRATIONS

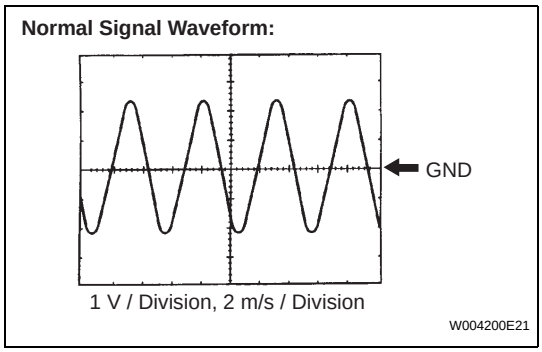

(a) INSPECTION USING OSCILLOSCOPE
(1) Connect the oscilloscope to terminals RR+ - RR- or RL+ - RL- of the skid control ECU.
(2) Drive the vehicle at approximately 19 mph (30 km/h), and check the signal waveform.
OK:
A waveform as shown in the figure should be output.
HINT:
- As vehicle speed (wheel revolution speed) increases, a cycle of the waveform narrows and the fluctuation in the output voltage becomes greater.
- When noise is identified in the waveform on the oscilloscope, error signals are generated due to the speed sensor rotor's scratches, looseness or foreign matter attached to it.

NG → Go to step 3

OK

REPLACE BRAKE ACTUATOR ASSEMBLY

3 INSPECT REAR SPEED SENSOR

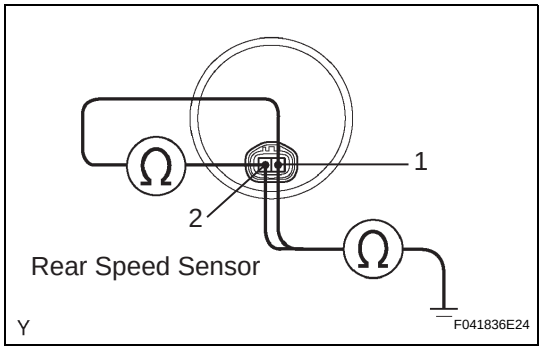

(a) Disconnect the rear speed sensor connectors.
(b) Measure the resistance according to the value(s) in the table below.
Standard resistance:
LH

Tester Connection	Specified Condition
A19-1 (RL-) - A19-2 (RL+)	1.45 kΩ at 25 +- 5°C

RH

Tester Connection	Specified Condition
A20-1 (RR-) - A20-2 (RR+)	1.45 kΩ at 25 +- 5°C

(c) Measure the resistance according to the value(s) in the table below.
Standard resistance:
LH

Tester Connection	Specified Condition
A19-1 (RL-) - Body ground	10 kΩ or higher
A19-2 (RL+) - Body ground	10 kΩ or higher

BC

cardiagn.com

RH

Tester Connection	Specified Condition
A20-1 (RR-) - Body ground	10 kΩ or higher
A20-2 (RR+) - Body ground	10 kΩ or higher

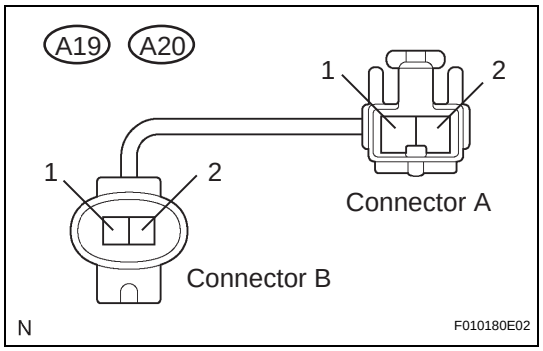

(d) Remove the seat cushion and seatback.
(e) Make sure that there is no looseness at the connector's locking part and connecting part.
(f) Disconnect the skid control sensor wire.
(g) Measure the resistance according to the value(s) in the table below.
Standard resistance:
LH

Tester Connection	Specified Condition
A19 (A-1) - A19 (A-2)	10 kΩ or higher

RH

Tester Connection	Specified Condition
A20 (A-1) - A20 (A-2)	10 kΩ or higher

(h) Measure the resistance according to the value(s) in the table below.
Standard resistance:
LH

Tester Connection	Specified Condition
A19 (A-1) - A19 (B-1)	Below 1 Ω
A19 (A-2) - A19 (B-2)	Below 1 Ω

RH

Tester Connection	Specified Condition
A20 (A-1) - A20 (B-1)	Below 1 Ω
A20 (A-2) - A20 (B-2)	Below 1 Ω

(i) Measure the resistance according to the value(s) in the table below.
Standard resistance:
LH

Tester Connection	Specified Condition
A19 (A-1) - Body ground	10 kΩ or higher
A19 (A-2) - Body ground	10 kΩ or higher

RH

Tester Connection	Specified Condition
A20 (A-1) - Body ground	10 kΩ or higher
A20 (A-2) - Body ground	10 kΩ or higher

NOTICE:
Check the speed sensor signal after replacement (See page BC-7).

NG → **REPLACE REAR SPEED SENSOR OR SKID CONTROL SENSOR WIRE**

cardiagn.com

OK

4 CHECK HARNESS AND CONNECTOR (REAR SPEED SENSOR - SKID CONTROL ECU)

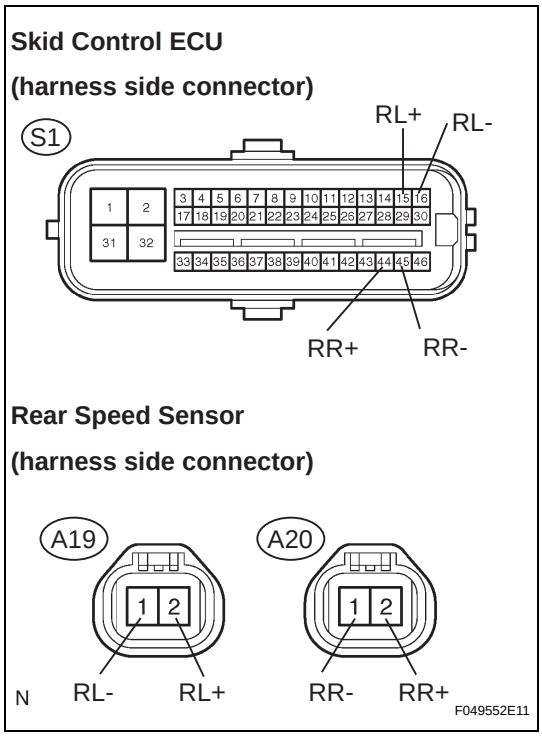

(a) Disconnect the skid control ECU connector and the rear speed sensor connectors.

(b) Measure the resistance according to the value(s) in the table below.

Standard resistance:

LH

Tester Connection	Specified Condition
S1-15 (RL+) - A19-2 (RL+)	Below 1 Ω
S1-16 (RL-) - A19-1 (RL-)	Below 1 Ω

RH

Tester Connection	Specified Condition
S1-44 (RR+) - A20-2 (RR+)	Below 1 Ω
S1-45 (RR-) - A20-1 (RR-)	Below 1 Ω

(c) Measure the resistance according to the value(s) in the table below.

Standard resistance:

LH

Tester Connection	Specified Condition
S1-15 (RL+) - Body ground	10 kΩ or higher
S1-16 (RL-) - Body ground	10 kΩ or higher

RH

Tester Connection	Specified Condition
S1-44 (RR+) - Body ground	10 kΩ or higher
S1-45 (RR-) - Body ground	10 kΩ or higher

NG → **REPAIR OR REPLACE HARNESS OR CONNECTOR**

OK

5 INSPECT SPEED SENSOR AND SENSOR ROTOR SERRATIONS

BC

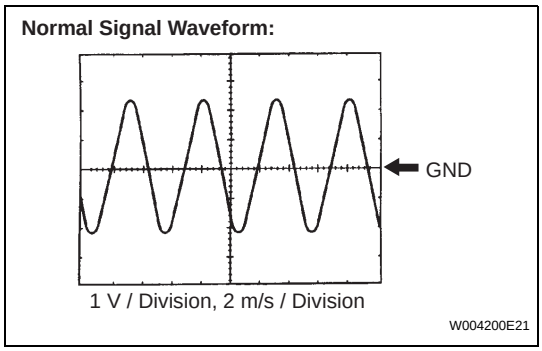

(a) INSPECTION USING OSCILLOSCOPE

(1) Connect the oscilloscope to terminals RR+ - RR- or RL+ - RL- of the skid control ECU.

(2) Drive the vehicle at approximately 19 mph (30 km/h), and check the signal waveform.

OK:

A waveform as shown in the figure should be output.

HINT:

- As vehicle speed (wheel revolution speed) increases, a cycle of the waveform narrows and the fluctuation in the output voltage becomes greater.

cardiagn.com

- When noise is identified in the waveform on the oscilloscope, error signals are generated due to the speed sensor rotor's scratches, looseness or foreign matter attached to it.

NG → **Go to step 6**

OK

REPLACE BRAKE ACTUATOR ASSEMBLY

6 INSPECT REAR SPEED SENSOR INSTALLATION

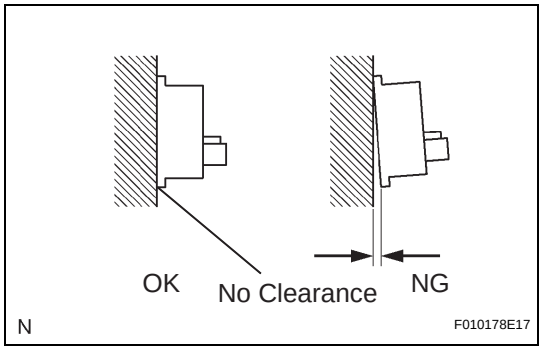

(a) Check the sensor installation.
OK:
There is no clearance between the sensor and rear axle carrier.
NOTICE:
Check the speed sensor signal after replacement (See page BC-7).

NG → **REPLACE REAR SPEED SENSOR**

OK

7 INSPECT REAR SPEED SENSOR TIP

(a) Remove the rear speed sensor (See page BC-215).
(b) Check the sensor tip.
OK:
No scratches or foreign matter on the sensor tip.
NOTICE:
Check the speed sensor signal after replacement (See page BC-7).

NG → **CLEAN OR REPLACE REAR SPEED SENSOR**

OK

cardiagn.com

8	**INSPECT SPEED SENSOR ROTOR**

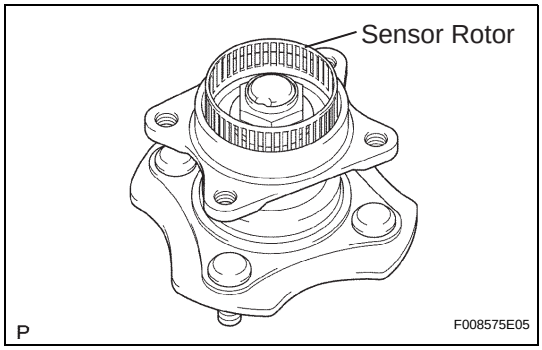

(a) Check the sensor rotor serrations.
OK:
No scratches, missing teeth or foreign matter on the rotor.
NOTICE:
Check the speed sensor signal after replacement (See page BC-7).

NG → **REPLACE REAR AXLE HUB AND BEARING ASSEMBLY (SPEED SENSOR ROTOR)**

OK

REPLACE BRAKE ACTUATOR ASSEMBLY

cardiagn.com